— PROPRIETARY —
THIS DOCUMENT CONTAINS CONFIDENTIAL, PROPRIETARY INFORMATION THAT IS FOX PROPERTY. DO NOT DISCLOSE TO OR DUPLICATE FOR OTHERS EXCEPT AS AUTHORIZED BY FOX.

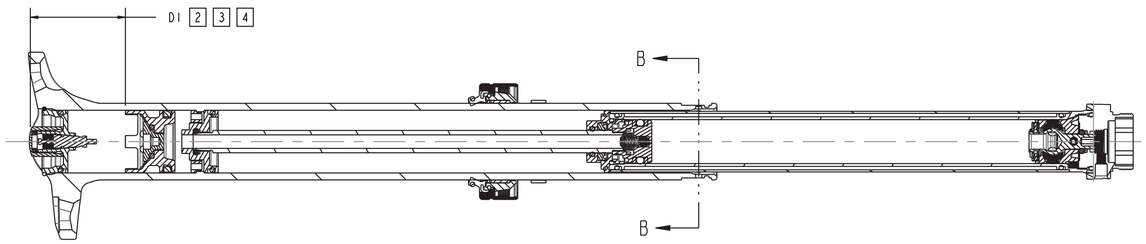

SECTION A-A
SCALE 1:1

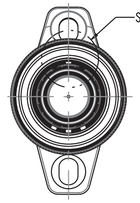

SECTION B-B

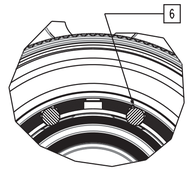

DETAIL Z
SCALE 3:1

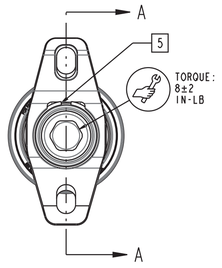

SCALE 1:1

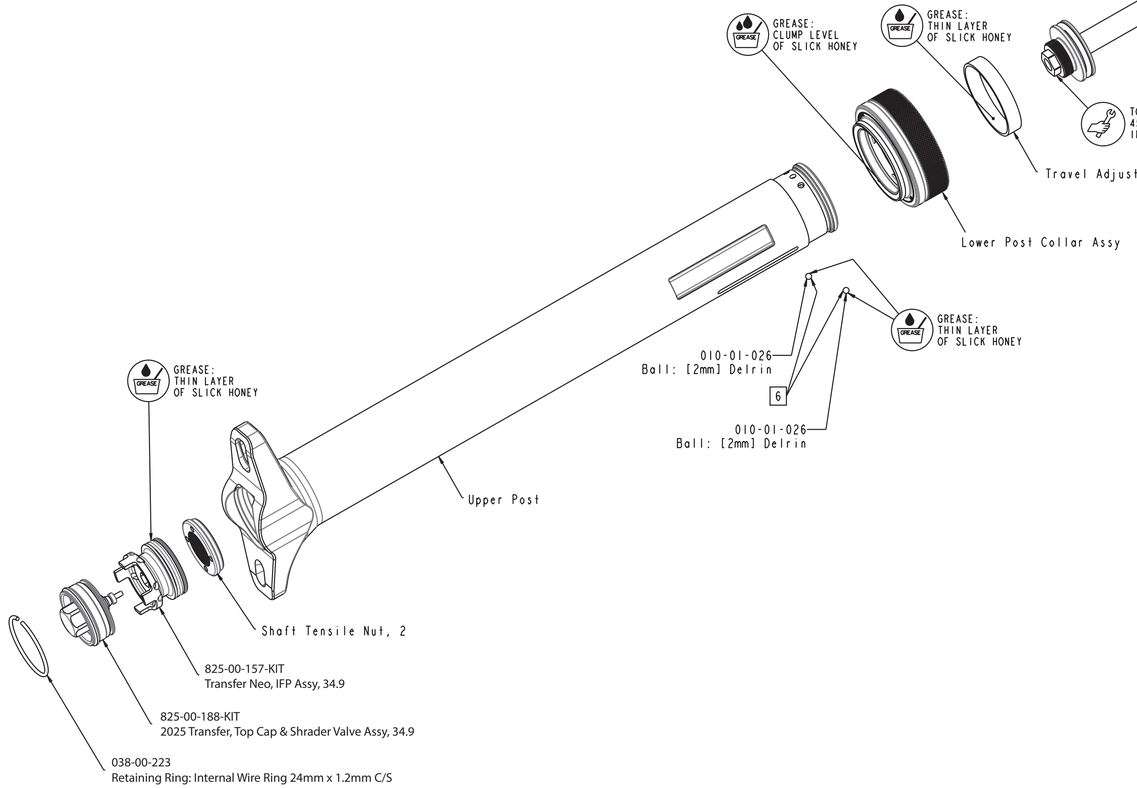

TRAVEL (MM)	CHARGE PRESSURE ±5 PSI [4]	
	31.6	34.9
125	335/325	335/325
150	335/325	335/325
175	335/325	335/325
200	335/325	335/325
225	360/350	360/350
240	360/350	360/350

TRAVEL (MM)	DI ± 0.25 (MM)	
	31.6	34.9
125	31.65	31.01
150	36.04	32.16
175	39.70	35.23
200	43.31	38.23
225	48.01	41.25
240	50.93	43.66

NOTES: (UNLESS OTHERWISE SPECIFIED)

1. FILL AT FULL EXTENSION.

[2] SET IFP HEIGHT (DI) PER TABLE.

[3] ADD 0.5cc TO 1cc OF FLOAT FLUID TO IFP CHAMBER

[4] SET IFP NITROGEN PRESSURE PER TABLE.
335 (NEW BUILD)/ 325 (RE-CHARGE)
360 (NEW BUILD)/ 350 (RE-CHARGE)

[5] ORIENT RETAINING RING GAP TO RELIEF AT FRONT OF POST

[6] 2MM BALLS INSTALLED WITHIN UPPER POST BORE TRAPPED BETWEEN THE UPPER POST AND PRESSURE TUBE ASSY.
NOTE: THESE ARE NOT PRESENT IN 34.9 ASSEMBLIES

FOX Factory, Inc.
2055 Sugarloaf Circle, Suite 300
Duluth, Ga 30097 USA Phone 800-369-7469

TITLE: Transfer Neo, E-Opt, Upper Post

SIZE: D | DWG. NO. | REV: B

PLOT SCALE: 1:1 | SHEET: 1 OF 1